Clamptek®

PART NUMBER: **CH-12050-HB**

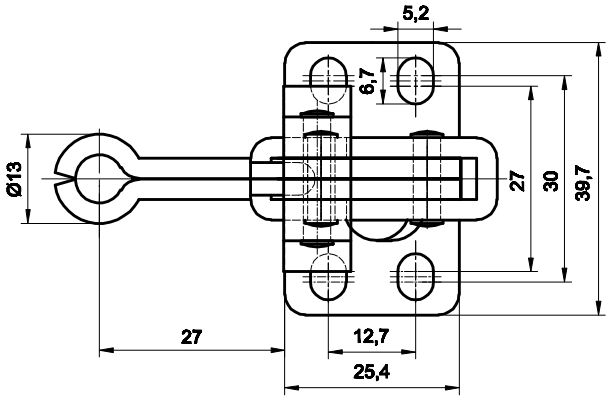

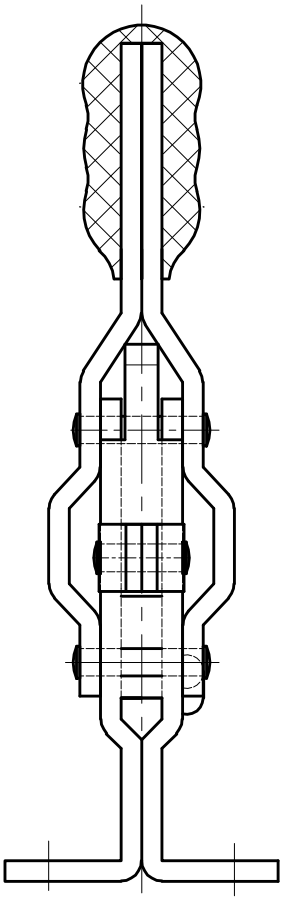

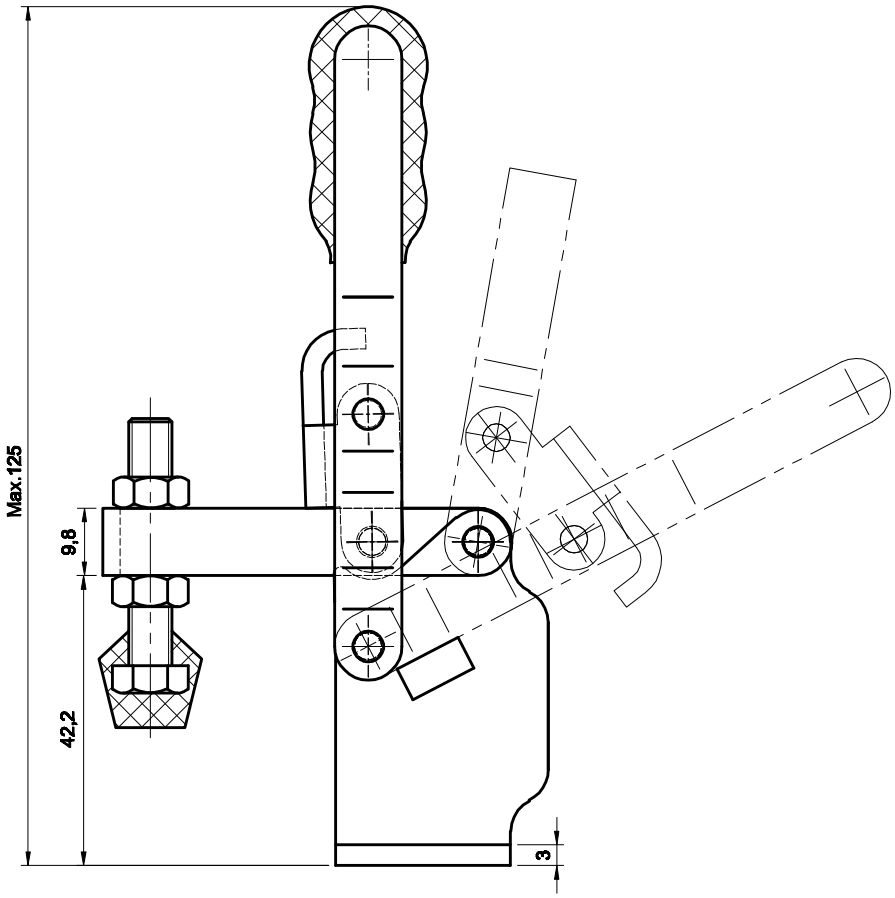

BAR OPENS:100°

HANDLE OPENS:60°

SPINDLE SUPPLIED:CH-FC-14134